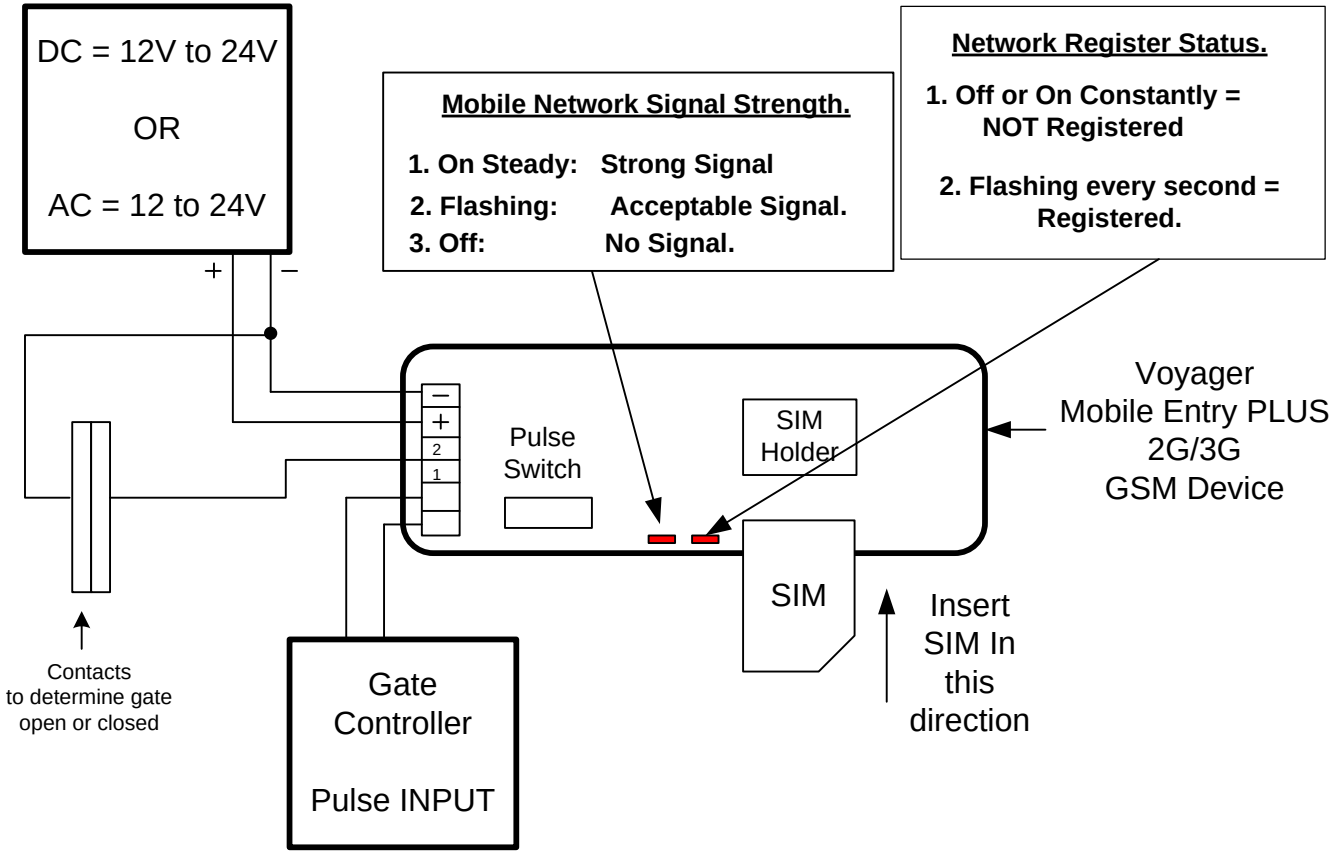
DC = 12V to 24V
OR
AC = 12 to 24V
+
–
Mobile Network Signal Strength.
1. On Steady: Strong Signal
2. Flashing: Acceptable Signal.
3. Off: No Signal.
Network Register Status.
1. Off or On Constantly = NOT Registered
2. Flashing every second = Registered.
–
+
2
1
Pulse Switch
SIM Holder
SIM
Voyager Mobile Entry PLUS 2G/3G GSM Device
Insert SIM In this direction
Contacts to determine gate open or closed
Gate Controller
Pulse INPUT